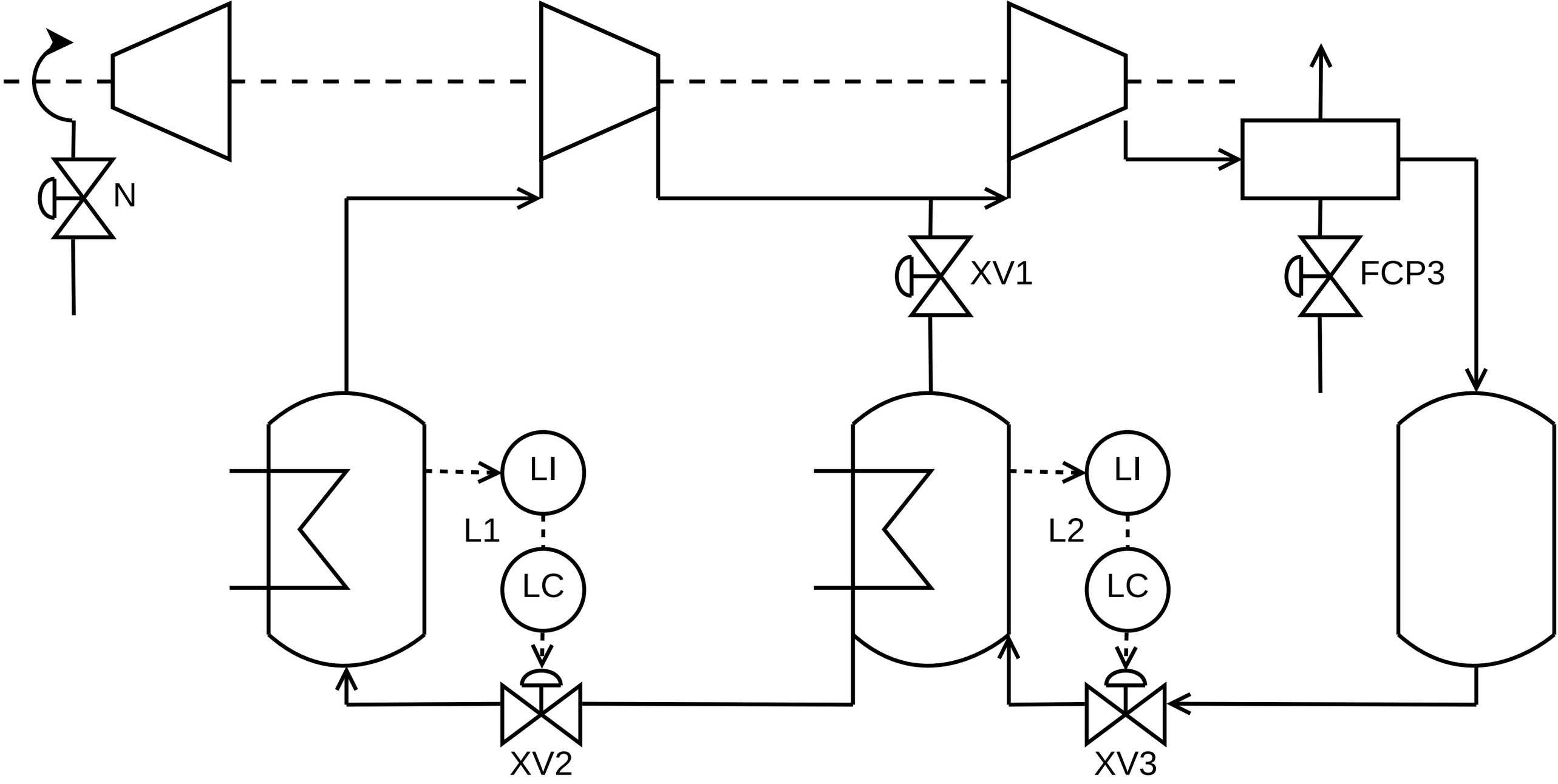
N
XV1
FCP3
LI
L1
LC
LI
L2
LC
XV2
XV3