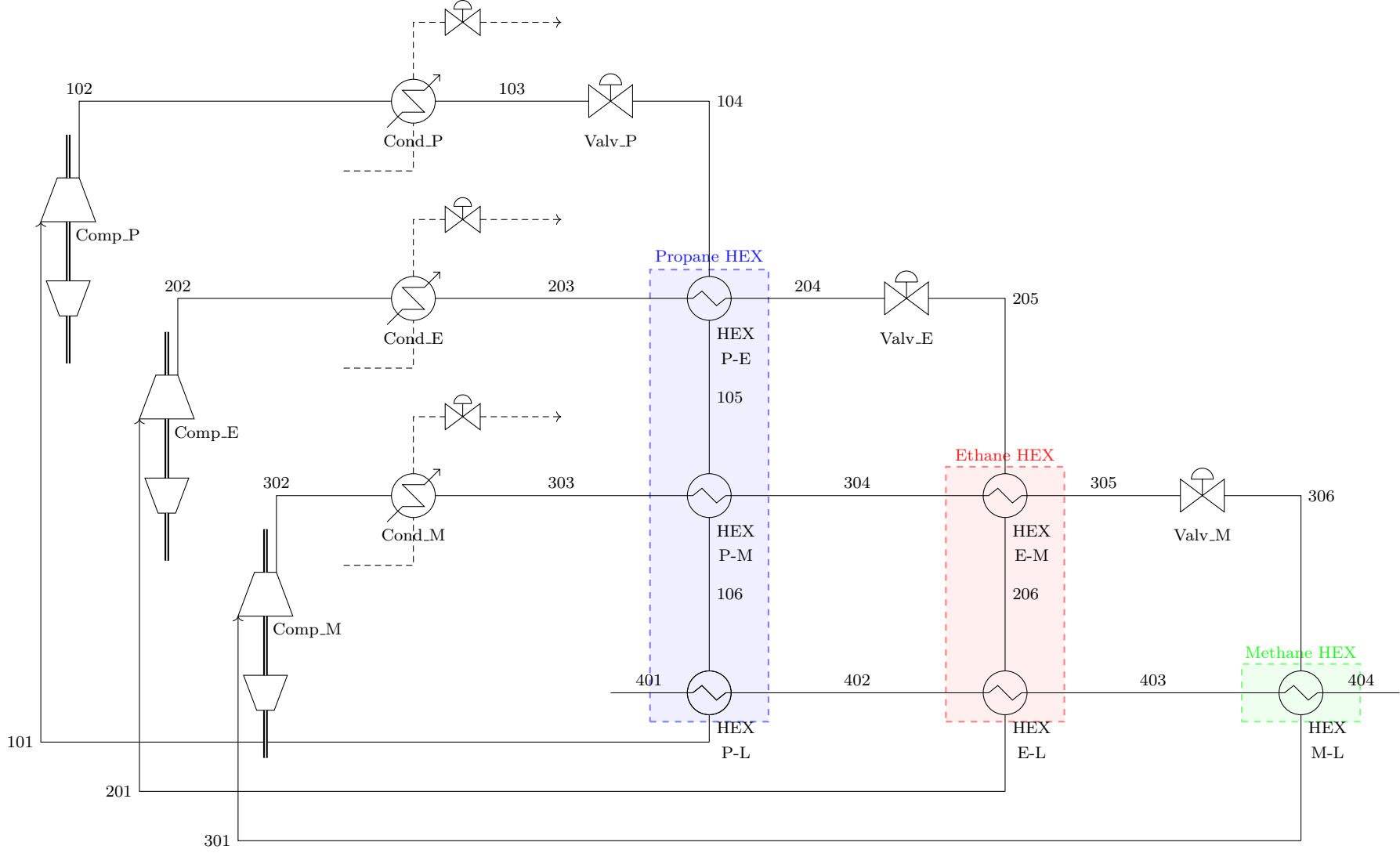
102
103
104
Cond_P
Valv_P
Comp_P
Propane HEX
202
203
204
205
Cond_E
HEX
P-E
Valv_E
105
Comp_E
Ethane HEX
302
303
304
305
306
Cond_M
HEX
P-M
HEX
E-M
Valv_M
106
206
Comp_M
Methane HEX
401
402
403
404
HEX
P-L
HEX
E-L
HEX
M-L
101
201
301