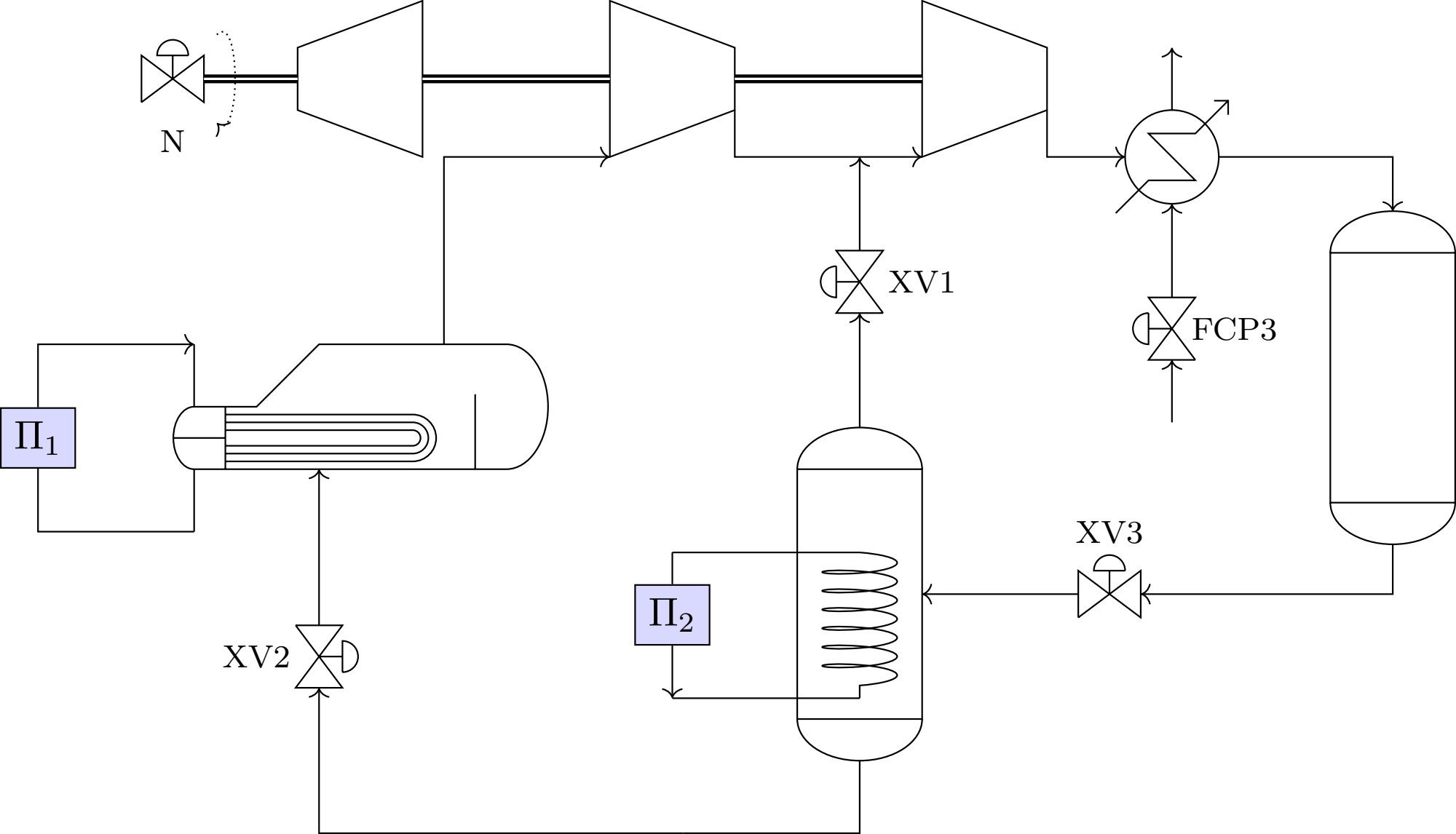
N
XV1
FCP3
Π_1
XV3
Π_2
XV2