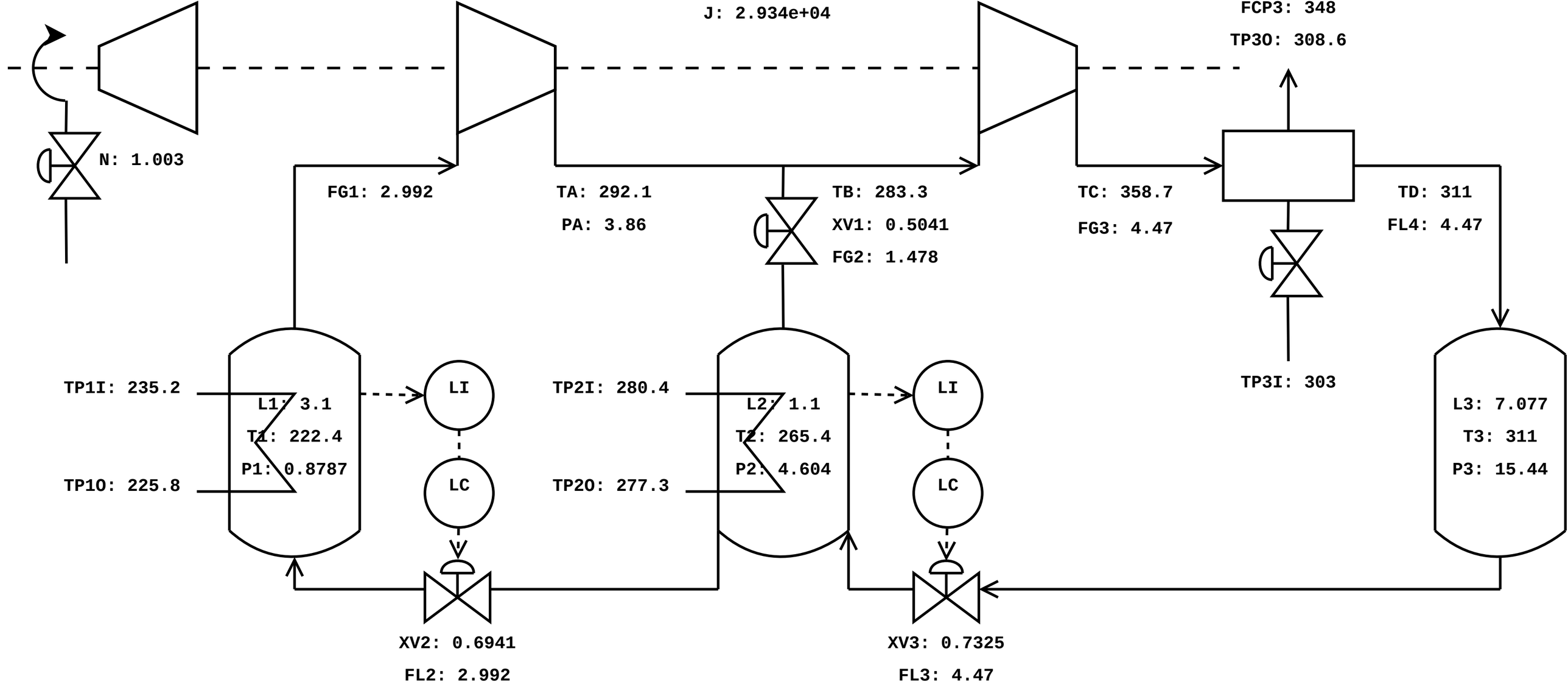
J: 2.934e+04
FCP3: 348
TP3O: 308.6
N: 1.003
FG1: 2.992
TA: 292.1
PA: 3.86
TB: 283.3
XV1: 0.5041
FG2: 1.478
TC: 358.7
FG3: 4.47
TD: 311
FL4: 4.47
TP3I: 303
TP1I: 235.2
L1: 3.1
T1: 222.4
P1: 0.8787
TP1O: 225.8
LI
LC
TP2I: 280.4
L2: 1.1
T2: 265.4
P2: 4.604
TP2O: 277.3
LI
LC
L3: 7.077
T3: 311
P3: 15.44
XV2: 0.6941
FL2: 2.992
XV3: 0.7325
FL3: 4.47