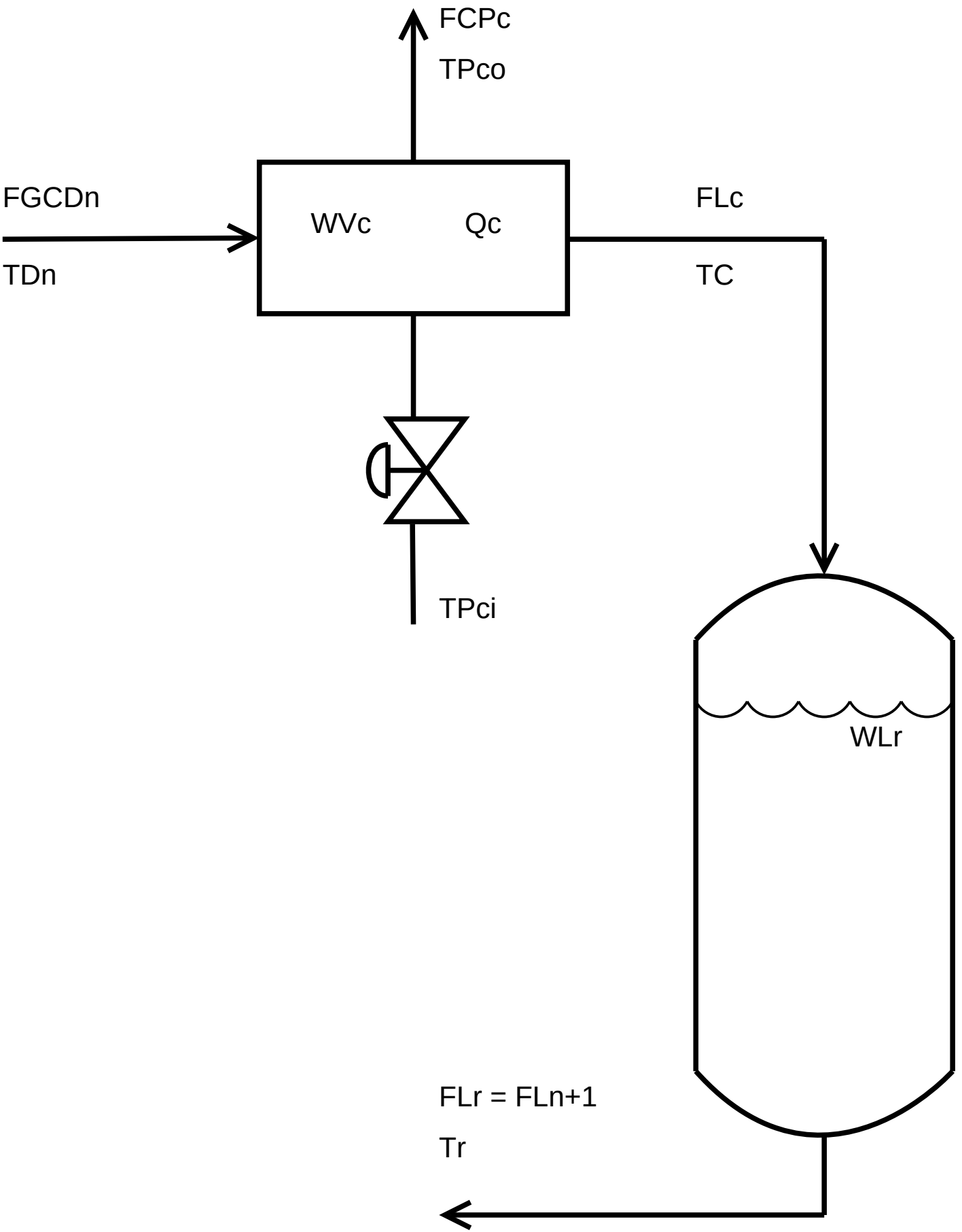
FCPc
TPco
FGCDn
TDn
WVc
Qc
FLc
TC
TPci
WLr
FLr = FLn+1
Tr