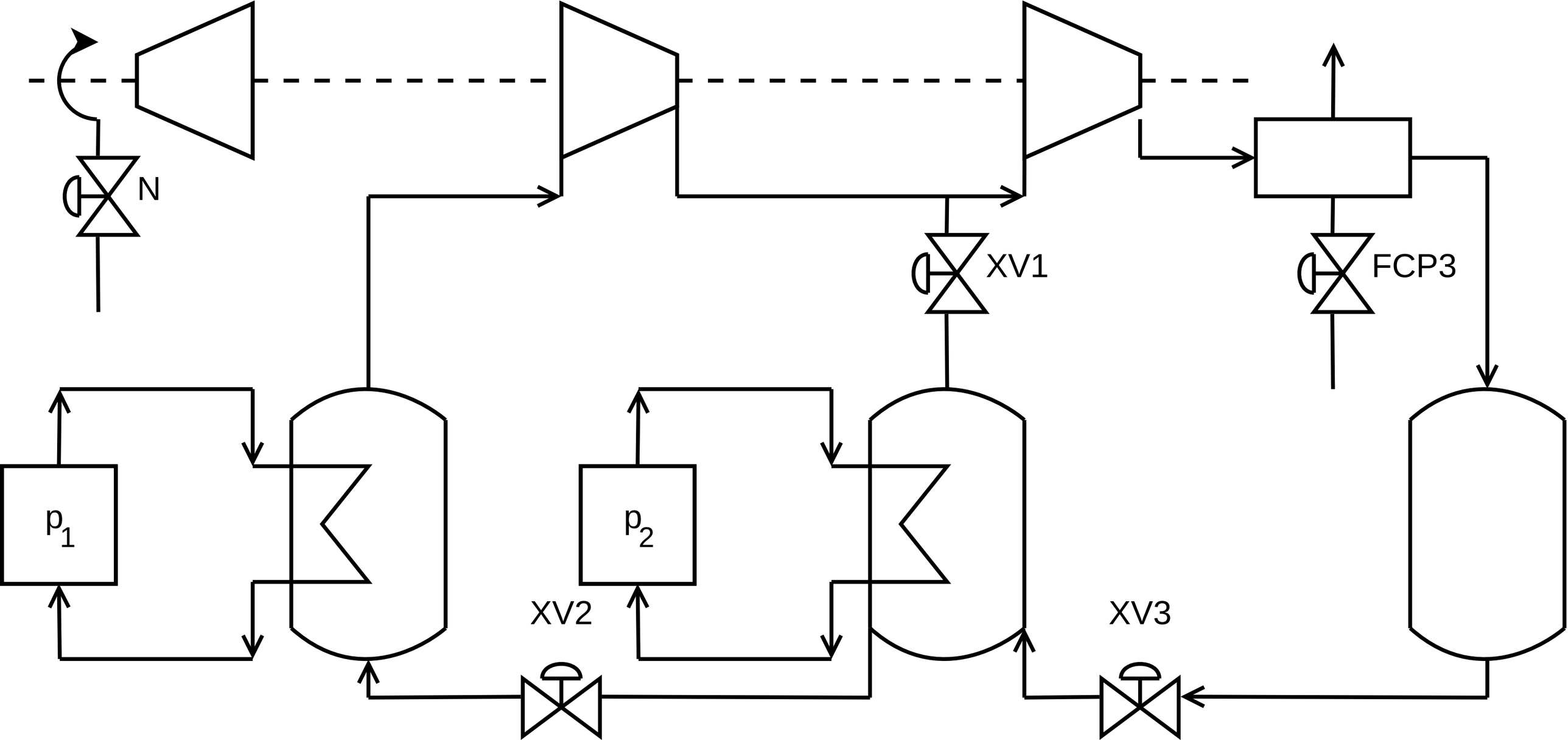
N
XV1
FCP3
p1
p2
XV2
XV3