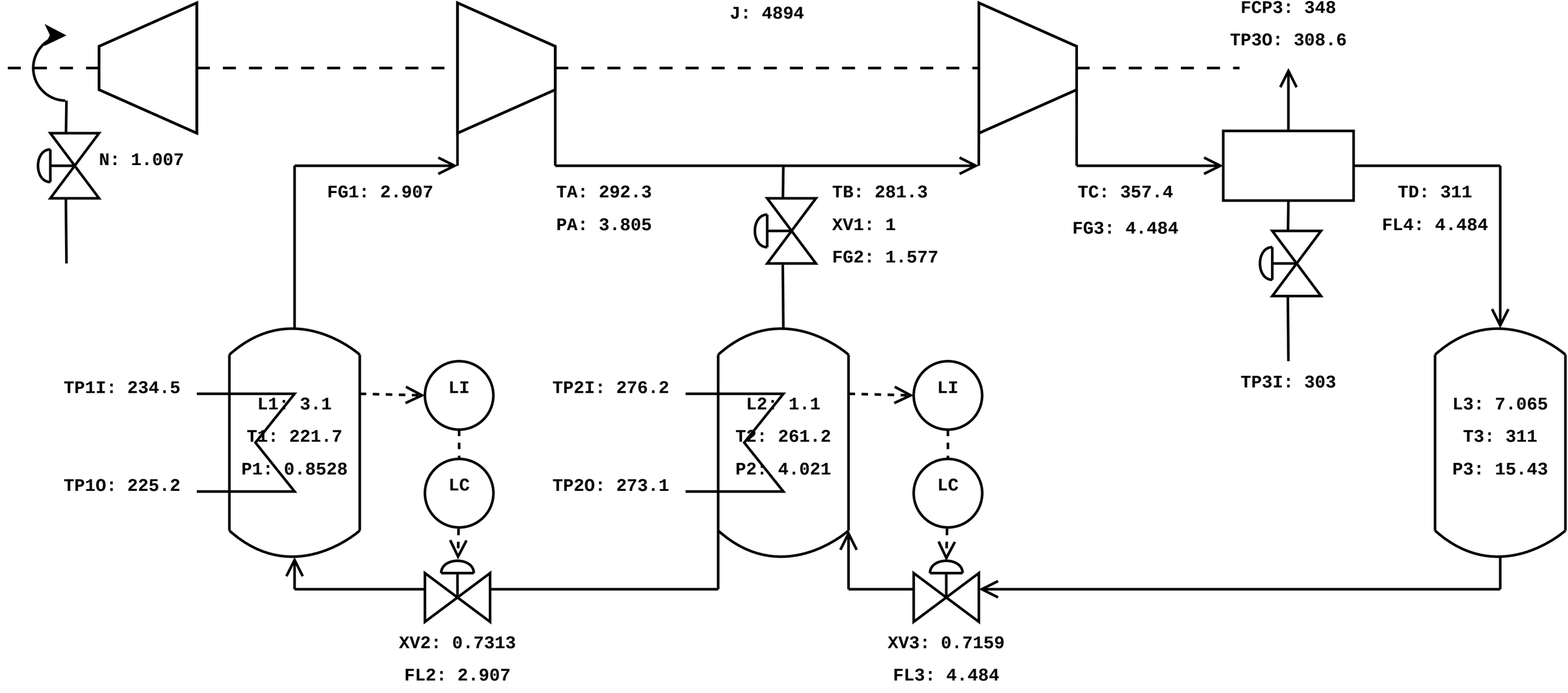
J: 4894
FCP3: 348
TP3O: 308.6
N: 1.007
FG1: 2.907
TA: 292.3
PA: 3.805
TB: 281.3
XV1: 1
FG2: 1.577
TC: 357.4
FG3: 4.484
TD: 311
FL4: 4.484
TP3I: 303
TP1I: 234.5
L1: 3.1
T1: 221.7
P1: 0.8528
TP1O: 225.2
LI
LC
TP2I: 276.2
L2: 1.1
T2: 261.2
P2: 4.021
TP2O: 273.1
LI
LC
L3: 7.065
T3: 311
P3: 15.43
XV2: 0.7313
FL2: 2.907
XV3: 0.7159
FL3: 4.484